Scan to open the product

3842546999 Electric Switch Comfort Bosch Rexroth

Reference: 3842546999

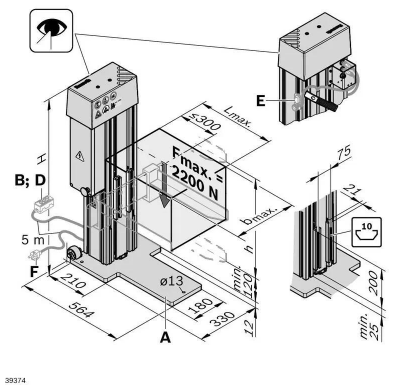

Short description

3842546999

Description

The Electric Switch Comfort 3842546999 is an original Bosch Rexroth product, providing superior quality and reliability. This manual switch is ideal for industrial applications, equipped with a power cable and a Comfort sensor unit. CreatX Technology SRL offers local support and repairs for this product, ensuring optimal performance and durability.

For more information:
https://creatx.ro/en/bosch-rexroth-profile-accessories/boschrexroth-3842546999-electric-switch-comfort.html